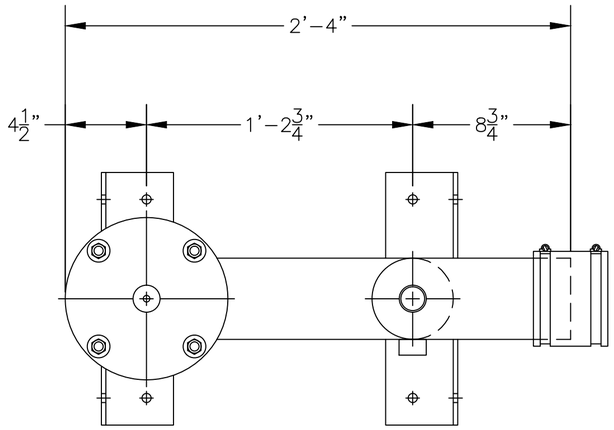

PLAN

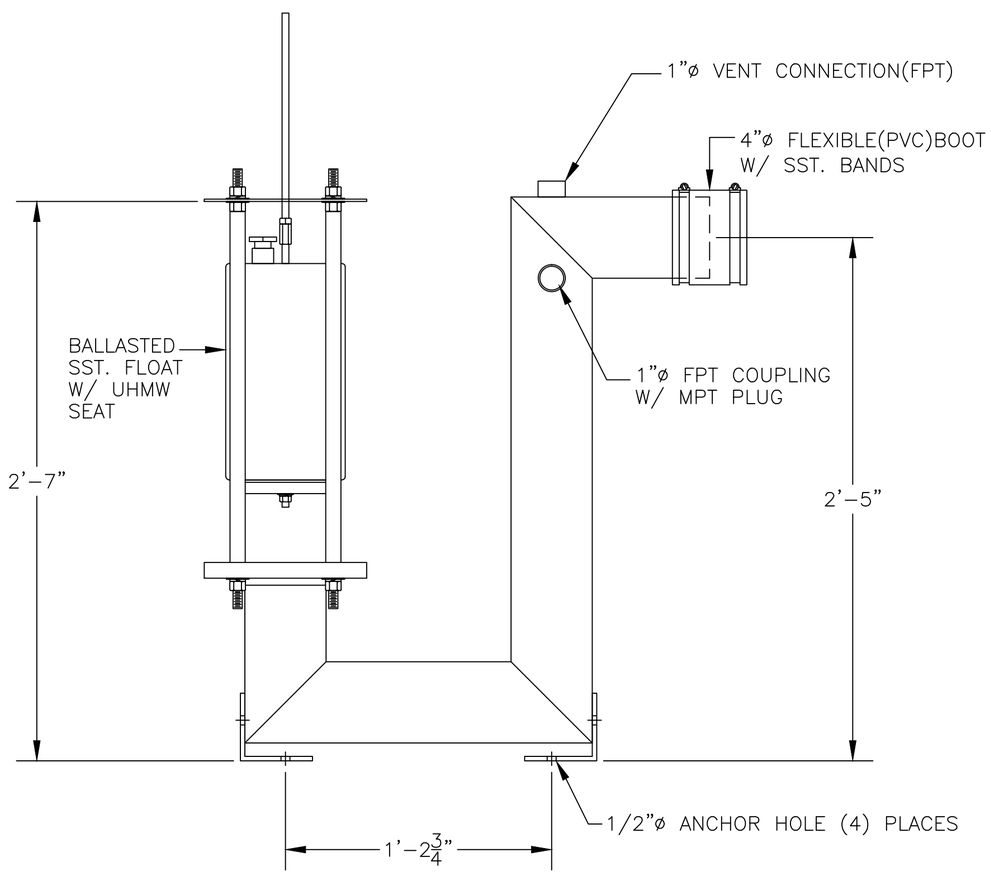

SIDE VIEW

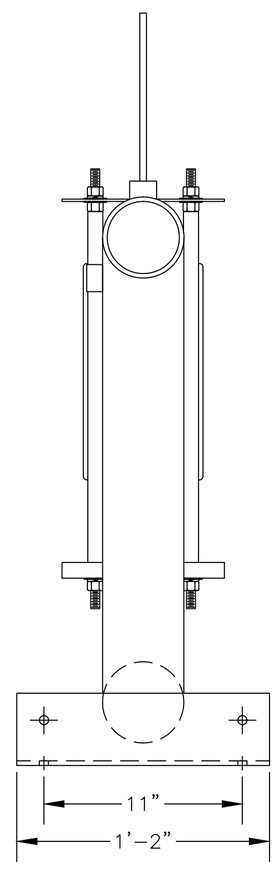

OUTLET END

IMPORTANT INFORMATION

COMPLETE STEP BY STEP INSTALLATION INSTRUCTIONS ARE PROVIDED WITH EACH VALVE TO INSURE PROPER OPERATION. SEE BULLETIN# 6.4 READING THE ENTIRE PROCEDURE BEFORE ATTEMPTING INSTALLATION WILL SAVE TIME & MONEY.

1. LIFTING HARNESS IS SUPPLIED & INSTALLED FOR CONTRACTORS USE. MUST BE REMOVED AFTER INSTALLATION.
2. FLEXIBLE OUTLET CONNECTION SUPPLIED WITH EACH VALVE
3. 1"ø VENT PIPE TO BE SUPPLIED & INSTALLED BY CONTRACTOR. VENT PIPE MUST BE EXTENDED ABOVE MAXIMUM OIL LEVEL OR OUTSIDE OF OIL SUMP. OIL MAY BYPASS STOP VALVE IF VENT IS NOT INSTALLED PROPERLY.
4. VALVE TO BE MOUNTED TO SUMP FLOOR. 1/2"ø HOLES ARE PROVIDED IN BASE ANGLES.
5. VALVE VAULT MUST BE PRIMED WITH WATER & FLOAT OPENED PRIOR COMPLETION OF INSTALLATION.
6. MANUAL LIFTING CABLE HANDLE IS TO BE MOUNTED NEAR MANHOLE BY CONTRACTOR. DO NOT USE MANUAL LIFTING CABLE IF OIL IS PRESENT.

DRAWN BY: TMB

CHECKED BY:

THIS DRAWING AND SPECIFICATION IS THE PROPERTY OF OWS TECHNOLOGIES 1109 25TH STREET WEST PALM BEACH, FL. 33407 AND SHALL NOT BE REPRODUCED WITHOUT WRITTEN PERMISSION.

SCALE: 1=6

DATE: 6/19/13

OIL WATER SEPARATOR TECHNOLOGIES, LLC

1109 25TH STREET W.P.B., FL. 33407

OWS JOB No. –

DRAWING No. 3S5007

FILE: OSV-4SS 6/19/13

MODEL: OWS-OSV-4SS

JOB: OWS TECHNOLOGIES